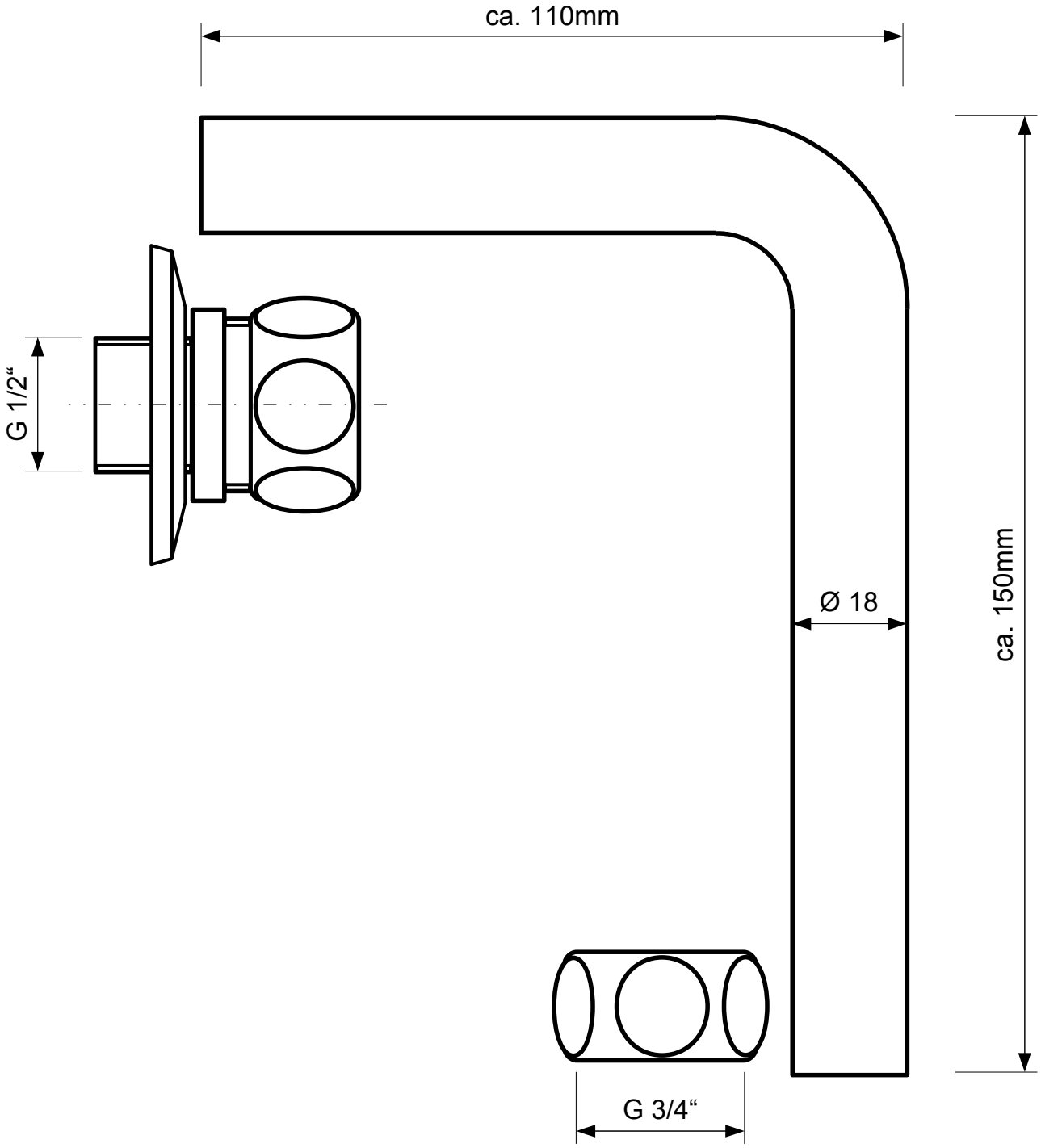
ca. 110mm
G 1/2“
Ø 18
ca. 150mm
G 3/4“